## ELECTRICAL CIRCUIT

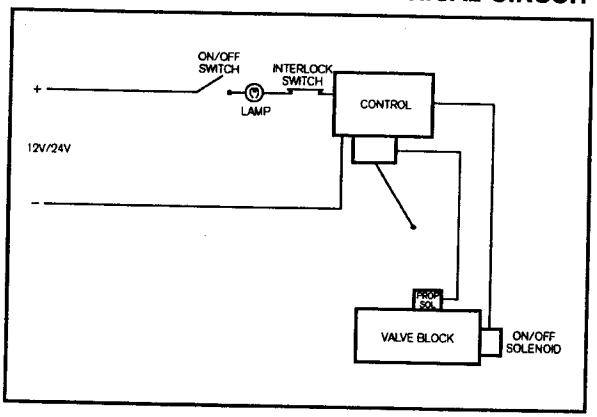


## TROLLING VALVE BASIC CIRCUIT DIAGRAM

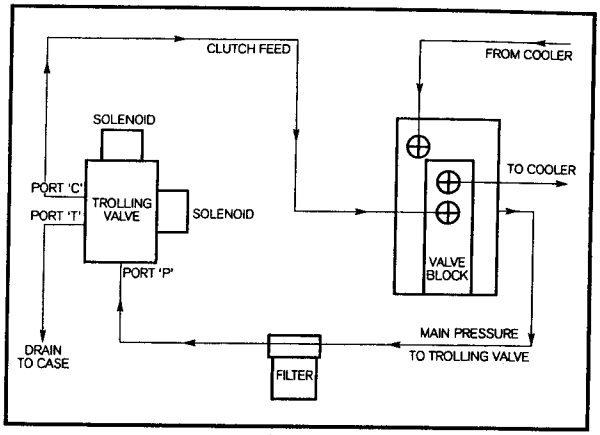


Fig. 1

## SCHEMATIC LAYOUT

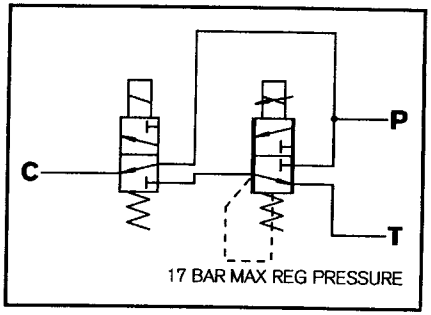


## SOLENOID BLOCK ASSEMBLY

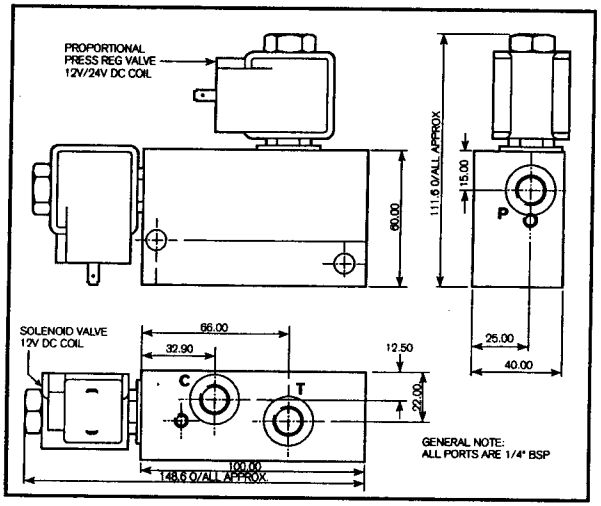


## OPERATING LEVER AND ON/OFF SWITCH

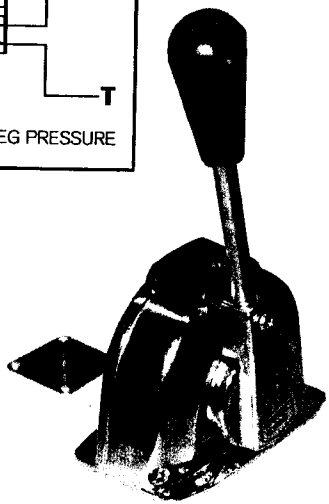

## IMPORTANT NOTE

All information given in this leaflet is correct at the time of going to press. However, in the interests of technical progress, design specifications are subject to change without notice. Accordingly, data given herein should be regarded as a general guide only and does not form part of any contract. Any specific performance requirements must be made known to us in writing with customer orders for goods. Illustrations are approximate only and do not form part of any contract with us; certified installation drawings are available on request. All goods are supplied in accordance with our standard terms and conditions of sale.